Covers & all

www.coversandall.com

# How to Measure Log Hoop Firewood Rack Cover

## Measurement Instruction

- Give exact measurement from edge to edge.
- The height dimensions will remain same as provided by you.
- We add 1" to 2" leeway on the given width/depth for easy pull-in and pull-out.

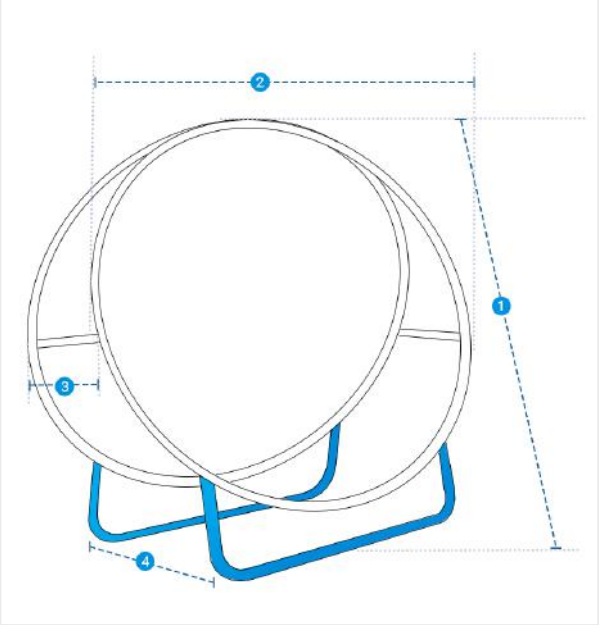


## Measurement (Inches)

| | | | |
|---|---|---|---|
| 1. Slant Height | | 2. Diameter | |
| 3. Middle Depth | | 4. Lower Depth | |

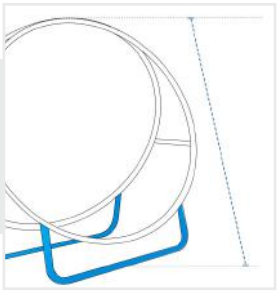

**1. Slant Height:**
Slant Height of the
Log Hoop Firewood Rack

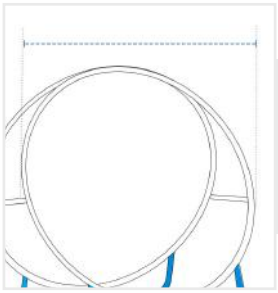

**2. Diameter:**
Diameter of the
Log Hoop Firewood Rack

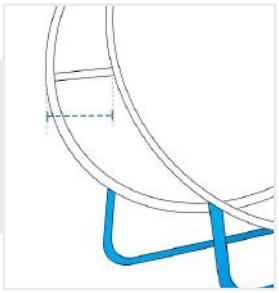

**3. Middle Depth:**
Middle Depth of the
Log Hoop Firewood Rack

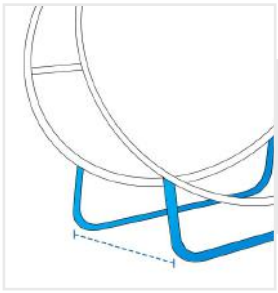

**4. Lower Depth:**
Lower Depth of the
Log Hoop Firewood Rack

We encourage you to upload the image of the article you need the cover for - this helps our team ensure covers are designed keeping your requirements in mind.